TOWN OF WILTON
22 TRAVER ROAD
GANSEVOORT, NEW YORK 12831-9127
(518) 587-1939, Ext. 603
FAX (518) 587-2837
Website: www.townofwilton.com
E-mail: mmykins@townofwilton.com

Mark Mykins
Senior Building Inspector
Code Enforcement Officer
Zoning Officer

John Herlihy
Building Inspector
& Code Enforcement Officer

Marcus Hart
Asst. Building Inspector
& Asst. Code Enforcement Officer

January 5, 2007

Dear Contractor/Applicant:

As of January 1, 2007, **all** building permit applications shall require plans stamped by an architect or engineer.

The **only** exceptions are:

1. Detached residential storage buildings of less than 250 square feet.
2. Decks of less than 250 square feet.

Buildings with a cellar or basement shall be required to have a perimeter drain and the interior of the foundation shall be fully stoned, under the entire slab, with a sump pit. A vapor barrier is required under the slab. An inspection of the basement slab, prior to pouring, shall be done to verify these items.

In addition, the actual basement floor elevation is required to be certified as meeting the required separation from season high groundwater. The same engineer that preformed the original groundwater tests and certification shall do this certification. This certification shall be submitted to the building department **prior** to inspection of the basement slab. I would recommend that the certification be completed prior to the framing of the structure, while the area is accessible and changes, which may be needed, can be accomplished.

Sincerely,

Mark E Mykins

Mark Mykins
Building Inspector

TOWN OF WILTON

22 TRAVER ROAD
GANSEVOORT, NEW YORK 12831-9127

(518) 587-1939, Ext. 603
FAX (518) 587-2837
Website: www.townofwilton.com
E-mail: mmykins@townofwilton.com

Mark Mykins
Senior Building Inspector
Code Enforcement Officer
Zoning Officer

John Herlihy
Building Inspector
& Code Enforcement Officer

Marcus Hart
Asst. Building Inspector
& Asst. Code Enforcement Officer

APPLICATION FOR BUILDING AND ZONING PERMIT

DATE:	**PERMIT NUMBER:**

APPLICATION IS HEREBY MADE to the Town of Wilton Building Department for the issuance of a Building and Zoning Permit pursuant to the New York State Building Code for the construction of buildings, additions or alterations, or for the removal or demolition, as herein described. The applicant or owner agrees to comply with all applicable laws, ordinances, regulations and all conditions expressed on the back of this application which are part of these requirements, and will allow all inspectors to enter the premises for the required inspections.

NOTE – READ INSTRUCTIONS ON THE REVERSE SIDE

Applicant's Name:	**ZONING DISTRICT:**		
Applicants Address:	Lot Size:	Area (sq. ft.):	
	Existing Structure Size (sq. ft.):		
Applicant's Phone Number:	Existing Structure Use:		
Owner's Name:	New Structure Size (sq. ft.):		
Owner's Address:	Kind of Structure:		
	NEW STRUCTURE YARDS:		
Owner's Phone Number:	Front Yard Distance: (in feet):		
Contractor's Name:	Right Side Yard Distance (in feet):		
Contractor's Address:	Left Side Yard Distance (in feet):		
	Rear Yard Distance (in feet):		
Contractor's Phone Number:	Height (in feet):		
	ACCESSORY STRUCTURE LOCATION:		
Street Address of Property	Left Side Yd.	Right Side Yd.	Rear Yd.
Tax Map Number:	Estimated Cost $:		
Existing Use:	Living Space (sq. ft.)	Porches (sq. ft.)	
Intended Use:	Decks (sq. ft.)	Other	
Name of Workers Compensation Carrier:	Garage (sq. ft.)	Number of Stalls	
Policy Number (forms must be attached)	**Total Square Footage:**		
	Fee $		
Note: THIS BUILDING PERMIT IS EFFECTIVE FOR (1) YEAR FROM DATE OF ISSUANCE.	***ALL ELECTRICAL WORK MUST BE INSPECTED BY AND A CERTIFICATE OF APPROVAL OBTAINED FROM A NEW YORK STATE CERTIFIED INSPECTION AGENCY.***		
Signature of Owner	Date		
Signature of Applicant	Date		
Signature of Contractor	Date		

The application of_____dated_____, 20_____is hereby approved (disapproved) and permission granted (refused) for the construction or alteration of a building and/or accessory structure as set forth above.

Reason for refusal of permit:_____

Dated_____, 20_____

Superintendent of Buildings

BUILDING APPLICATION REQUIREMENTS

TOWN OF WILTON

22 Traver Road
Gansevoort, New York 12831
(518) 587-1939 Ext: 603
FAX (518)587-2837

THE BUILDING DEPARTMENT MAY TAKE 8 WEEKS OR MORE, NOT INCLUDING WEEKENDS AND/OR HOLIDAYS, TO REVIEW PERMITS.

SUBMISSION

1. Application for Building and Zoning Permit required for each permit requested on Building Department Forms.
2. Description of Materials specification sheet required for each permit requested. (Photocopies are not allowed, plans and spec. sheets shall match and be completely filled out for each application.)
3. A minimum of two sets of Building Plans with original stamp and signature of a New York State licensed Engineer or Architect. (One set shall be returned to the applicant to be located on site for the use of the building department.)
4. Building plans shall include:
   a. Construction documents shall show the size, section and relative locations of structural members with floor levels, column centers and offsets fully dimensioned. The design loads and other information pertinent to the structural design required by §1603.1.1 through §1603.1.8 of the Building Code of New York State shall be clearly indicated on the construction documents for parts of the building or structure.
   b. Mechanical Plans as required to determine compliance with the applicable code of New York State.
   c. Plumbing diagrams as required to determine compliance with the applicable code of New York State.
   d. Electrical Plans as required to determine compliance with the applicable code of New York State.
   e. Energy Code Compliance check list, including ResCheck or ComCheck.
   f. Light & Ventilation Schedule - room by room, including emergency egress when required.
   g. Stair and guard detail
5. Survey showing proposed house location with all setbacks, finished basement floor elevation, finished foundation elevation and road/street elevation.

6. Certification of Seasonal High Groundwater Elevation by a licensed professional (P.E. or P.L.S.)
7. Well tests for individual lots including water flow and coliform bacteria testing, per New York State Department of Health standards.
8. Septic system designed by a Licensed Professional.
9. Certificate of Insurance Liability/Worker's Compensation with Town of Wilton listed as certificate holder.

FEES

Residential: $.20 sf. Minimum Fee $50.00
(Total sq. ft. including garages, decks, porches and any covered area)

Commercial $.30 sf. Minimum Fee $150.00

GENERAL REQUIREMENTS

1. Minimum of three (3) #4 or two (2) #5 reinforcement bar in footings, to be determined by Building Department.
2. Basement floor elevation must be minimum 3' above seasonal high ground water.
3. Poured foundations must be keyed or pinned.
4. Minimum 10" block or 8" poured foundations for all main structures.
5. Block foundations must be parged and tarred or other acceptable equivalent.
6. Poured foundations must be tarred or other acceptable equivalent.
7. All foundations must be pitched from the block or poured wall to the edge of the footing to ensure water run-off.
8. Finished floor elevation must meet approved subdivision requirements or minimum 2' above road elevation unless prior written approval by the building department.
9. All exhaust fans must be vented directly to outdoors.
10. Only <u>ONE</u> heating appliance per masonry chimney flue.
11. All single wall steel pipes must be at least 24 gauge.
12. Factory built chimney must be "listed" by national testing agency.
13. "Listed" chimney must be triple insulated as it passes through the structure.
14. Wall nearest stovepipe must be protected by a non-combustible material with 1" min. air space.
15. Non-combustible flooring for woodstoves must extend 18" beyond ash door and extend 6" beyond sides and back.
16. Fireplace hearth minimum width 16" and extend at least 8" beyond each side of the fireplace opening. (Where opening is six square feet or larger hearth shall have a minimum width 20" and extend at least 12" beyond each side of the fireplace, R1003.10)
17. All "fuel chimneys" must maintain a 2" clearance from all combustibles.
18. Masonry chimney clay flue must be 5/8" thick minimum.

19. Chimneys, factory built and/or masonry, must extend 3' above highest point that it passes through, and minimum 2' higher than any portion of the building within 10'.
20. Factory built chimneys - if in chase - must have a fire stop every 8' maximum.
21. All fireplaces must have fresh air, glass doors, and a clean out.
22. **Written Certification by the installer of the chimney, fireplace, insert, and/or woodstove certifying the installation was done to NFPA 211 and State and Local Codes.**
23. A copy of the manufacturer's installation manual MUST be submitted for all woodstoves, inserts and/or factory built fireplaces.
24. Minimum 3" vent pipe as it passes through the roof.
25. Water supply system copper piping must be K or L.
26. Basement/Cellar Walls - Minimum depth of insulation **below grade:**
27. Basement/Cellar Wall Insulation Minimum R-11 consisting of either:
28. Leach field must be a minimum 4' above seasonal high ground water.
    a. Vapor barrier and 15 minute thermal barrier
    b. 0-25 flame spread rating foil faced
29. Septic System Diagram showing actual location on minimum 8 1/2" X 11" or larger sheet which shall include:
    a. Delineating property lines, street lines, building location and dimensions, and driveway and/or parking area.
    b. Lot number and street address.
    c. Distance of septic tank, distribution box, and leach field from foundation.
    d. Diagonals to clean out of septic tank and distribution box from foundation corners.
    e. Distance of well location from house, septic tank and leach fields.
    f. Name, address, and phone number of the Septic System Contractor.
    g. Signature of actual installer of the septic system.
30. Septic System Diagram designed by an Engineer showing actual location on minimum 8 1/2" X 11" or larger sheet which shall include:
    a. Delineating property lines, street lines, building location and dimensions, and driveway and/or parking area.
    b. Lot number and street address.
    c. Distance of septic tank, distribution box, and leach field from foundation.
    d. Diagonals to clean out of septic tank and distribution box from foundation corners.
    e. Distance of well location from house, septic tank and leach fields.
    f. Name, address, and phone number of the Septic System Contractor.
    g. Signature of actual installer of the septic system.

INSPECTIONS

By the Building Department are required at the following schedule (a **MINIMUM** 24 hours notice for all required inspections, voice mail inspection requests are not allowed). Additional inspections will not be scheduled until the prior inspection passes. The Building Department may impose a fine on contractors who make appointments for inspections and then do not notify said Department if, for some reason (including work not being completed), the inspection should have been cancelled or postponed:

1. Footings - before pouring.
2. Foundation - prior to backfill (foundations shall be capped or properly braced prior to inspection.)
3. Slab before pour.
4. Framing, Rough Plumbing and Heating. (Truss certificates are required to be provided prior to framing inspection. Will also be checking for house wrap.) Approved plans shall be located on site to the inspector's use during inspection.
5. Ice and Water Barrier
6. Insulation and Vapor Barrier, to be completed in conjunction with the MecCheck or ResCheck as provided with application.
7. Other inspections deemed necessary by the Building Department.
8. Septic system to be inspected and certified by the designing engineer and the building inspector.
9. Final Inspection for Certificate of Occupancy.

Building Permits and Building Plans are to be posted on the site, covered for protection against the weather and accessible to the Building Inspector. If the permit and plans are not available, the inspection will not be performed.

CERTIFICATE OF OCCUPANCY - Prior to scheduling an inspection the following items must be on file with Town of Wilton Building Department:

1. **For Commercial Applications**:
   a. Truss certificates.
   b. Water test results: quality and quantity. (New test)
   c. Written certification, by a Licensed Professional Engineer, that the septic system has been installed as per the Town of Wilton and the New York State Department of Health Appendix 75-A.9
   d. A registered design professional shall provide to the code enforcement official a written certification that the required HVAC tests, system balancing, etc., have been performed and that, in the professional opinion of the registered design professional, the system is operating as designed. The registered design professional shall retain copies of the test reports to be provided to the code enforcement official, if requested.
   e. Certification from the plumbing, sprinkler, fire alarm and other building system installers that the system was installed and tested as per the requirements of the code and the system is operating as required.
   f. Certification from the roofing contractor that an ice barrier was installed as per the requirements of the code.
   g. Stamped as-built plans for the building.
   h. Stamped as-built site plan with certification from the designing engineer that the site substantially complies with the approved site plan.

i. List of all interior finishes with a manufacturer's specification sheet indicating the flame spread.
j. Proof of final electrical inspection.
k. Such other information and/or certification deemed necessary by the Building Inspector to establish compliance of work performed.
l. Premises identification as required by code.

2. **For Residential Applications:**
   a. Truss certificates. (Provided prior to framing inspection.)
   b. Water test results: quality and quantity. (Tested within four weeks of submission for C.O.))
   c. Written certification, by a Licensed Professional Engineer, that the septic system has been installed as per the Town of Wilton and the New York State Department of Health Appendix 75-A.9
   d. Manufacturer's installation manual for woodstove, insert and/or factory-built fireplace (if applicable)
   e. Written certification by the installer certifying the installation of the chimney, fireplace, factory-built fireplace, insert and/or woodstove.
   f. Stamped final survey.
   g. Proof of final electrical inspection.
   h. Premises identification as required by code.

TOWN OF WILTON

22 TRAVER ROAD
GANSEVOORT, NEW YORK 12831-9127

(518) 587-1939, Ext. 603
FAX (518) 587-2837
Website: www.townofwilton.com
E-mail: mmykins@townofwilton.com

Mark Mykins
Senior Building Inspector
Code Enforcement Officer
Zoning Officer

John Herlihy
Building Inspector
& Code Enforcement Officer

Marcus Hart
Asst. Building Inspector
& Asst. Code Enforcement Officer

DESCRIPTION OF MATERIALS

SUBMIT WITH CORRESPONDING PLANS AND APPLICATION FOR BUILDING AND ZONING PERMIT ALL APPLICABLE SECTIONS MUST BE COMPLETED **BEFORE** BUILDING PERMIT CAN BE ISSUED.

1. EXCAVATION:

Type of Soil

2. FOUNDATION:

All concrete to be a min. 3000 P.S.I.

Footing Sizes:	Portland Cement Coat:	Yes	No
Foundation wall size & material:	Damp proofing material:		
Column Footing Size:	Termite Protection:		
Column size & material: /Spacing	Anchor Bolts:		O.C.
Girder size & material:	Footing drainage size (3" min. if req'd.)		
Footing depth: (min. 48" from grade to top of footing)			

3. SLAB ON GRADE:

Vapor barrier:	Perimeter insulation:
	Size & type:

4. CRAWL SPACE:

Clearance (30" min.):	Vapor barrier:	Yes	
Insulation:	Ventilation:	Yes	No
Footing depth:	Concrete Floor:	Yes	No

5. CHIMNEY'S:

Material: masonry metal	Flue size:		
Thimble size:	Flue lining:	clay	metal
Prefabricated: Single Double Triple (wall)	Cleanout:	yes	no

6. FIREPLACES:

Type: solid fuel gas burning	Type:	masonry	prefabricated
Flue lining: clay metal	Fresh air:	yes	no
Flue size:	Ash dump & cleanout:		
Hearth: yes no Distance from firebox opening:	Width	Distance beyond each side	
Fireplace facing:			

7. WOODSTOVES:

Woodstove: yes no Insert: yes no

Make & Model: New Used

NOTE: A COPY OF THE MANUFACTURES INSTALLATION MANUAL **MUST** BE SUBMITTED WITH APPLICATION.

8. FLOOR FRAMING:

SILL:

Size: Type: Sealant: Yes No

1st FLOOR:

Joist grade: Size & spacing: OC Bridging:

Sub-floor (material & size): Finish floor material:

2nd FLOOR:

Joist grade: Size & spacing: OC Bridging:

Sub-floor (material & size): Finish floor material:

9. EXTERIOR WALLS:

Wood frame grade & species: Stud size & spacing: OC

Corner bracing: Yes No Material Sheathing (thickness & type):

Building paper: Siding:

Masonry veneer: Brick ties:

10. INSULATION and VAPOR BARRIER (See also N.Y.S. Energy Code)

(Size, material & R-factor)

Roof: Ceiling:

Walls: Slab (Perimeter):

Foundation Walls: Proper Vent: Yes No

Floors over unheated basement or garage:

11. PARTITION FRAMING:

Stud grade: Size & spacing: OC

12. CEILING JOIST:

Grade: Size &spacing: OC Bridging:

13. ROOF FRAMING: Minimum design for 50 lb. per sq. foot ground snow load:

Rafters, size & grade: Ridge size:

Collar ties: size OC Trusses: OC H Clip: Yes No

Sheathing (thickness & type):

14. ROOFING:

Material: Weight:

Felt (15# min.): Ice and water barrier required:

15. INTERIOR FINISH (Sheetrock, size, etc.):

Walls: Ceiling:

16. STAIRS:

Main:	Width:	Rise:	Run:	Headroom:
Basement:	Width:	Rise:	Run:	Headroom:
Other:	Width:	Rise:	Run:	Headroom:
	Width:	Rise:	Run:	Headroom:

NOTE: Maximum rise 8- ¼ Minimum Run 9"+ 1- ⅛ nosing.

17. PLUMBING: (Vent size through roof minimum 3")

Sink drain size:	Vent size:	Lavatory drain size:	Vent size:
Water closet drain size:	Vent size:	Bathtub drain size:	Vent size:
Stall shower drain size:	Vent size:	Laundry drain size:	Vent size:
Water system piping:	Copper K L	Plastic	
Water heater:	Electric Gas	Other	

BUILDING HOUSE DRAIN – SIZE & MATERIAL:

4" House trap location (also show on plans):

18. SEWAGE DISPOSAL:

County/Town Sewer Engineered and approved septic system:

19. HEATING

BTUH RATING		Flue type & size:		
Type:	Heat Pump	Electric	Hot Water	Other
Fuel:	Electric	Gas	Oil	Other

20. ATTIC VENTILATION:

Ridge Vent:	Yes	No	Gable:	Yes	No
Soffit:	Yes	No	Other (description):		

21. EXTERIOR DOORS:

Main Entry Door size (min. 36")

House Door to Attached Garage size (min. ¾ hr. fire rated, self closing & latching):

Other (specify type & size): 1.

2.

3.

22. ELECTRICAL WIRING – Outside agency inspection by town approved agency:

Safety switch for oil / gas burner: Yes No

Number of smoke and CO detectors (show on plans):

23. PORCHES:

Footing size: Footing Depth:

Foundation: Size:

24. GARAGE:

Attached	Detached	Under living space	No. of stalls:
Footing size:		Footing Depth:	
Foundation size:		Poured	Block
Sheetrock (size & fire rating):	Wall:	Ceiling:	

House Door to Attached Garage size (min. ¾ hr. fire rated, self closing & latching):

REMARKS:

I, THE UNDERSIGNED, DO HEREBY AGREE TO FURNISH, SUPPLY AND INSTALL THE AFOREMENTIONED MATERIALS AND COMPLY WITH THE SPECIFICATIONS SET FORTH ABOVE IN CONJUNCTION WITH THE ERECTION AND CONSTRUCTION OF THE BUILDING(S) FOR WHICH PLANS WERE SUBMITTED AND APPROVED. ALL ITEMS COMPLY WITH THE NEW YORK STATE UNIFORM FIRE PREVENTION & BUILDING CODE AND THE TOWN OF WILTON BUILDING APPLICATION REQUIREMENTS.

Date: 20

Applicant

TOWN OF WILTON
22 TRAVER ROAD
GANSEVOORT, NEW YORK 12831-9127

(518) 587-1939, Ext. 603
FAX (518) 587-2837
Website: www.townofwilton.com
E-mail: mmykins@townofwilton.com

Mark Mykins
Senior Building Inspector
Code Enforcement Officer
Zoning Officer

John Herlihy
Building Inspector
& Code Enforcement Officer

Marcus Hart
Asst. Building Inspector
& Asst. Code Enforcement Officer

Applicant's Responsibility Regarding Determination of Seasonal High Groundwater Elevation

It is the responsibility of the Applicant to have the appropriate professional(s) determine the USGS elevation of the seasonal high groundwater of proposed buildings:

> The basement or slab elevation for all buildings is required to be a minimum of three (3) feet above the seasonal high groundwater table elevation. All buildings constructed with a basement or slab elevation between three (3) and five (5) feet above the seasonal high groundwater table elevation shall be equipped with a sump pump which discharge to a closed drainage system or an adequate outfall as approved by the licensed professional and the Building Inspector of the Town of Wilton.

My acknowledgement of this responsibility is indicated by my professional signature (P.E. or approved Soils Scientist) for the property listed below:

Name of Applicant: _____

Location of Property: _____

USGS elevation of seasonal high groundwater _____

Proposed basement/slab USGS elevation _____

* Verification of foundation/slab elevation:

On the _____ day of _____ 20___, the foundation bottom was measured at USGS elevation of _____. This will result in a top of slab elevation of _____, based on the design plans for the building.

_____
Date

_____
Signature of Professional (with stamp if by P.E.)

Optional space below for additional stamp and signature if L.L.S. was involved:

_____
Date

_____
Signature and Stamp of L.L.S.

* *Note: This portion of the form must be completed, recertified, and resubmitted prior to scheduling of footing inspection.*

Revised 6/15/07

SARATOGA COUNTY SEWER DISTRICT #1
CONSTRUCTION PERMIT APPLICATION

Permit Number: _____ Date: _____

Name of Project: _____

Project's Proponent: _____

Location of Project: _____

Tax Map Number (SBL) of Project's Location: _____

Projected Design Flow: _____gpd Projected Discharge Rate: _____gpm

Name of Entity that will own sewer system through completion of construction: _____

_____

Address: _____

Town/City: _____

Phone: _____ Fax: _____

Description of Project: _____

For each phase of project or connection, state the projected design flows and discharge rates:

Phase 1: Projected Design Flow: _____ Projected Discharge Rate: _____

Phase 2: Projected Design Flow: _____ Projected Discharge Rate: _____

Phase 3: Projected Design Flow: _____ Projected Discharge Rate: _____

Phase 4: Projected Design Flow: _____ Projected Discharge Rate: _____

Total Projected Design Flow: _____ Total Projected Discharge Rate: _____

Is sewer system proposed to be dedicated to Saratoga County Sewer District #1?

( ) Yes ( ) No

Name of entity that will own sewer system if not dedicated to SCSD #1:

Name: _____

Address: _____

Town/City: _____

Phone: _____ Fax: _____

Contractor: _____

Address: _____

Phone: _____ Fax: _____

E-Mail: _____

Property Owner/Developer: _____

Address: _____

Phone: _____ Fax: _____

E-Mail: _____

Design Engineer: _____

Address: _____

Phone: _____ Fax: _____

E-Mail: _____

Saratoga County Sewer District #1 requires the applicant for construction permit and the project's proponent to designate an agent to whom SCSD #1 shall direct all written, verbal and electronic communications to regarding the proposed project or sewer connection. **NOTE:** By naming such designated agent, the applicant and the project's proponent agree to be bound by all decisions communicated by said designated agent to SCSD #1 regarding the proposed project.

Designated Agent: _____

Address: _____

Phone: _____ Fax: _____

E-Mail: _____

Note: SCSD #1's permit to construct sanitary sewer facilities or connections shall expire one (1) year from the date of its execution by SCSD #1 and the permittee.

Applicant's Signature: _____

Applicant's Name: _____

(please print)

Address: _____

Phone: _____ Fax: _____

E-Mail: _____

For Office Use Only: Engineering Certification Required Yes _____ No _____

Special Conditions Attached Yes _____ No _____

Fee: $_____ . **Days:** _____ **Date Paid:** _____ **Insp. Engr:** _____

Check #_____

Insurance Certificate Approved Date: _____ **Checked By:** _____

_____

Permit Administrator

_____

Date of Issue

SPECIAL CONDITIONS: _____

_____

_____

_____

_____

_____

_____

_____

TOWN OF WILTON
20 TRAVER ROAD
GANSEVOORT, NEW YORK 12831-9127

(518) 584-4588
FAX (518) 691-0013

KIRKLIN WOODCOCK
Highway Superintendent

LORI OLSON
Highway Secretary

PERMIT FOR CONSTRUCTION OF A DRIVEWAY

Application is hereby made for a permit pursuant to Section 136 of the Highway Law to construct a driveway connection within the Right of Way of a Town Road. Approval of this permit is contingent on the approval of all other agencies involved with this project.

APPLICANT: Name: _____ Phone No.: _____

Address: _____

_____

LOCATION: Town Road No. _____ Road Name: _____

Town: _____ Which side of Road: N S E W (Circle One)

Map No: _____ Block No.: _____ Lot No: _____

_____ Feet and/or _____ Miles N S E W (Circle One)

From: _____

Number of Driveways requested: _____ Width: _____

GENERAL REQUIREMENTS:

1. The construction shall be in accordance with the requirements listed herein on plan "**Standard Driveway Ditch Crossing**" and all special requirements shown on or attached to the "**Permit**".

2. The applicant shall furnish all materials and bear all costs of construction within the Town Highway Right of Way and all work done and materials used shall meet the requirements of the Town of Wilton Highway Department.

3. No alteration or addition shall be made to any driveway without first securing a new permit from the Town of Wilton.

4. The angle of the driveway with respect to the highway pavement edge shall not be less than 60° or more than 120°.

5. No driveway will be permitted within 50 ft. of an intersection.

6. No new driveway will be permitted at a location where the lack of sight distance in either direction along the highway is a hazard.

7. Residential driveway entrance shall be a maximum of 20 feet wide.

8. **Commercial driveways** shall be a maximum of 50 feet wide for a single combined entrance and exit, or a maximum of 50 feet each when two separate entrances are permitted. No more than two entrances from one highway to a single commercial establishment shall be permitted. Application for a commercial entrance shall include a fully dimensioned plan of the proposed driveway showing drainage.

DRIVEWAY CONSTRUCTION PERMIT
TOWN OF WILTON HIGHWAY DEPT.

Permission is hereby granted to the above applicant to construct a driveway ditch crossing at the location described above in full conformance with the requirements set forth herein and attached hereto.

Designate attachments:_____

DATE:_____ _____
(Signature of approving authority)

NOTE: A stake with flagging must be placed at the proposed driveway entrance to identify the location for inspection.

SARATOGA COUNTY DEPARTMENT OF PUBLIC WORKS

SARATOGA COUNTY PUBLIC WORKS FACILITY
3654 GALWAY ROAD
BALLSTON SPA, NEW YORK 12020-2517

JOSEPH C. RITCHEY, P.E., COMMISSIONER
(518) 885-2235 or 885-0087
FAX (518) 885-8809

PERMIT FOR CONSTRUCTION OF A DRIVEWAY

(Rev. 12/7/04)

Driveway Permit ID Number: __ __ - __ __ __ __ - __ __ __ __ - __ __ __ __ __ __ - __ __ __
(For Office Use Only)

Application is hereby made for a permit pursuant to Section 136 of the Highway Law to construct a driveway connection within the Right of Way of a County Highway. Approval of this permit is contingent on the approval of all other agencies involved with this project.

APPLICANT: NAME: _____ PHONE NO.: _____

ADDRESS: _____

_____

DATE OF APPLICATION: _____

LOCATION: COUNTY ROAD NO.: _____ ROAD NAME: _____

TOWN: _____

SIDE OF ROAD: (N) (S) (E) (W)

MAP NO.: _____ BLOCK NO.: _____ LOT NO.: _____

_____ FEET and/or _____ MILES (N) (S) (E) (W)

FROM: _____

NUMBER OF DRIVEWAYS REQUESTED, WIDTH: _____

GENERAL REQUIREMENTS:

1. The construction shall be in accordance with the requirements listed herein on plan "STANDARD DRIVEWAY DITCH CROSSING" and all special requirements shown on or attached to the "PERMIT".

2. The applicant shall furnish all materials and bear all costs of construction within the County Highway Right of Way and all work done and materials used shall meet the requirements of the Saratoga County Department of Public Works.

3. No alteration or addition shall be made to any driveway without first securing a new permit from the County.

4. The angle of the driveway with respect to the highway pavement edge shall not be less than 60° or more than 120°.

5. No driveway will be permitted within 50 ft. of an intersection.

6 No new driveway will be permitted at a location where the lack of sight distance in either direction along the highway is a hazard.

7. Residential driveway entrance shall be a maximum of 20 feet wide.

8. Commercial driveways shall be a maximum of 50 feet wide for a single combined entrance and exit, or a maximum of 50 feet each when two separate entrances are permitted. No more than two entrances from one highway to a single commercial establishment shall be permitted. Application for a commercial entrance shall include a fully dimensioned plan of the proposed driveway showing drainage.

9. Construction activities that disturb one acre or more of land must be covered under a SPDES permit. For more information visit the New York State Department of Environmental Conservation website: http://www.dec.state.ny.us/website/dow/PhaseII.html

10. The property owner is encouraged to follow these basic practices related to stormwater runoff pollution prevention:

    a. Use fertilizers sparingly and sweep up driveways, sidewalks and roads
    b. Never dump anything down storm drains.
    c. Revegetate bare and disturbed areas in your yard.
    d. Compost yard waste.
    e. Avoid pesticides; learn about Integrated Pest Management (IPM)
    f. Direct downspouts away from paved surfaces.
    g. Take your car to the car wash instead of washing it in the driveway.
    h. Check car for leaks and recycle motor oil.
    i. Pick up after your pet.
    j. Have your septic tank pumped and system inspected regularly.

For additional information related to Stormwater runoff pollution prevention please visit the following internet websites:

New York State Department of Transportation

http://www.dec.state.ny.us/website/dow/mainpage.htm

United States Environmental Protection Agency

www.EPA.gov/npdes.stormwater or www.epa.gov/nps

Permission is hereby granted to the above applicant to construct a driveway ditch crossing at the location described above in full conformance with the requirements set forth herein and attached hereto (attachments designated)

DATE:_____ _____

(signature of approving authority)

NOTE: A stake with flagging must be placed at the proposed driveway entrance to identify the location for inspection.

STANDARD DRIVEWAY DITCH CROSSING

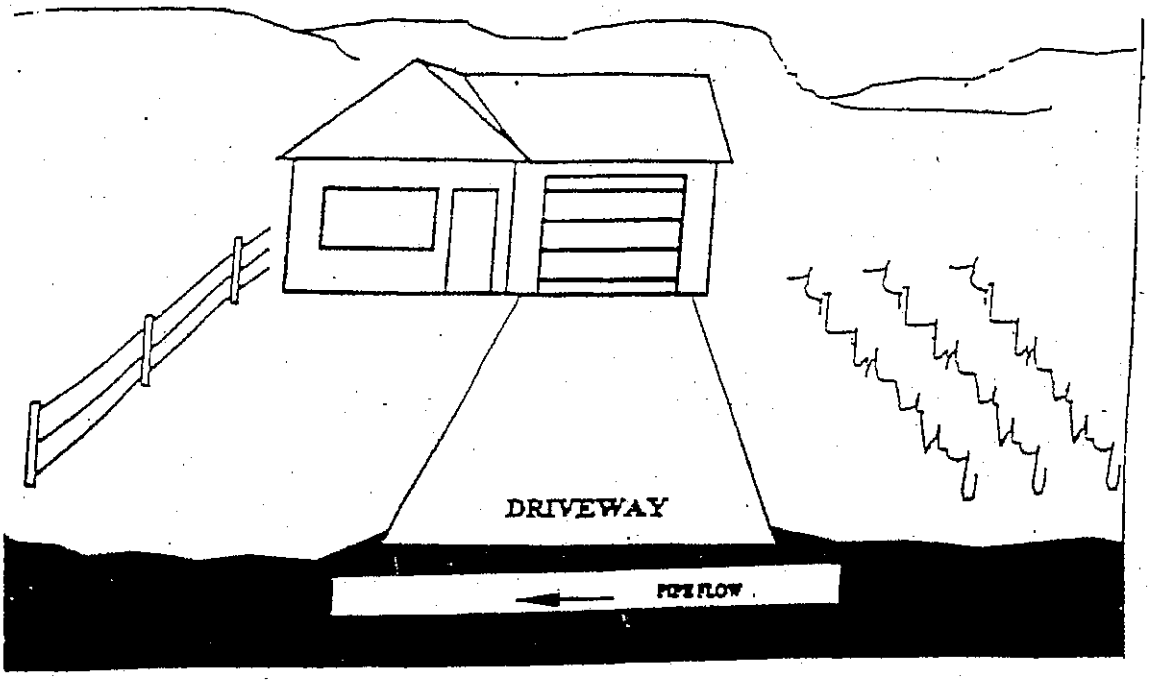

1. Pipe must be not less than 12 inches inside diameter with a maximum length of 20 feet and be of either reinforced concrete, corrugated metal or High Density smooth interior corrugated polyethylene pipe. (NO SUBSTITUTES)

2. Pipe shall be placed so that inside flow line of pipe is at bottom of ditch and sloped true to ditch grade, maintaining free and unobstructed flow.

3. Highway shoulder must not be altered.

4. Any rise in driveway shall occur on the backslope of ditch line so that drainage from driveway will flow into the ditch and not into the highway.

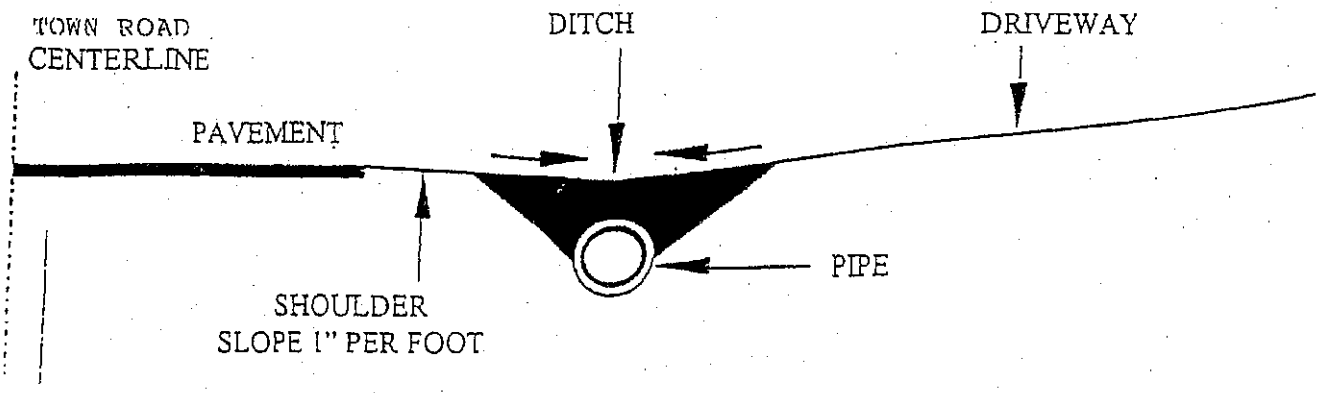

CROSS SECTION

CROSS SECTION

TYPICAL RESIDENTIAL DRIVEWAY

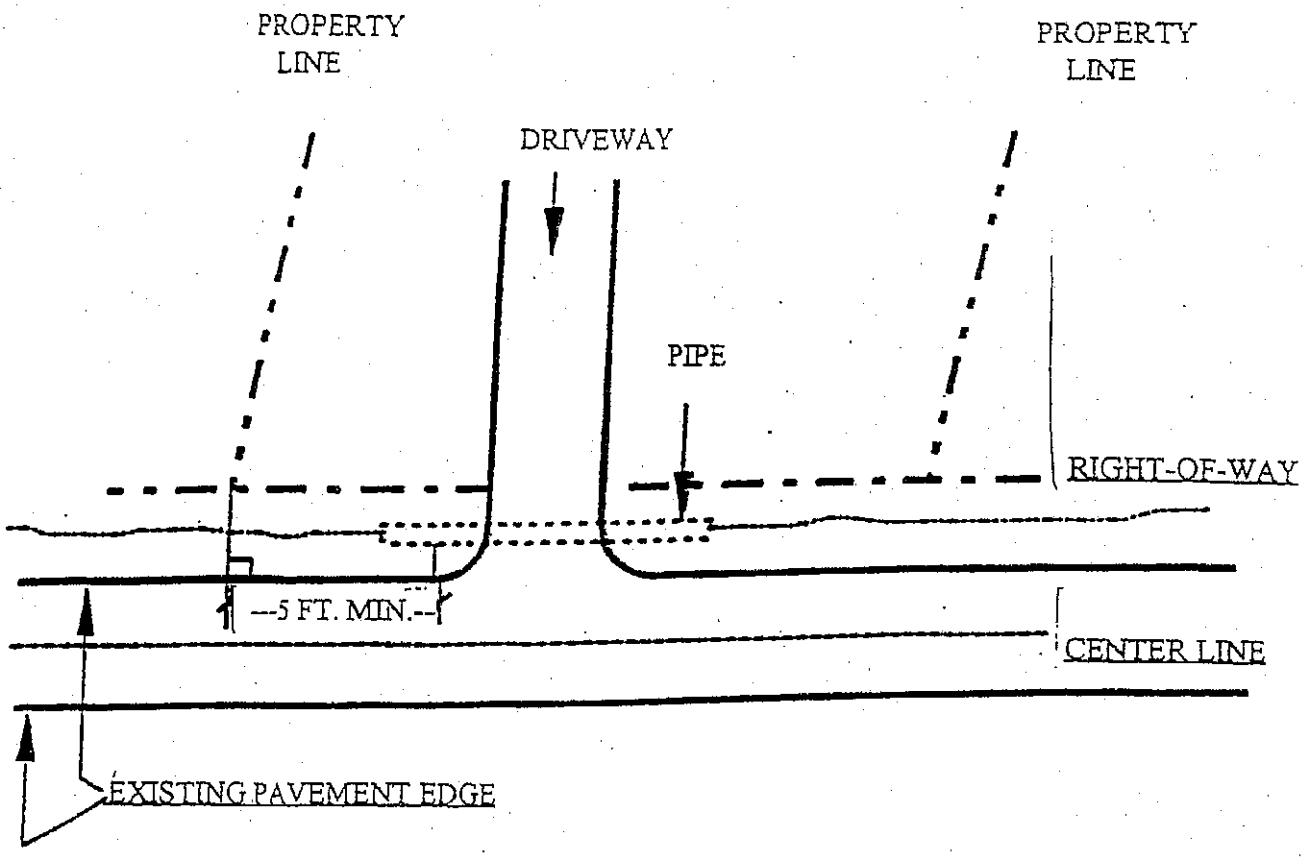

NOTE:

1. Residential driveway entrance maximum of 20 feet wide.
2. Minimum of 5 feet between property line and starting radius of driveway.
3. A sketch of the proposed driveway shall be submitted with each permit application.
4. See Standard Driveway Ditch Crossing Diagram attached.

STANDARD DRIVEWAY DITCH CROSSING

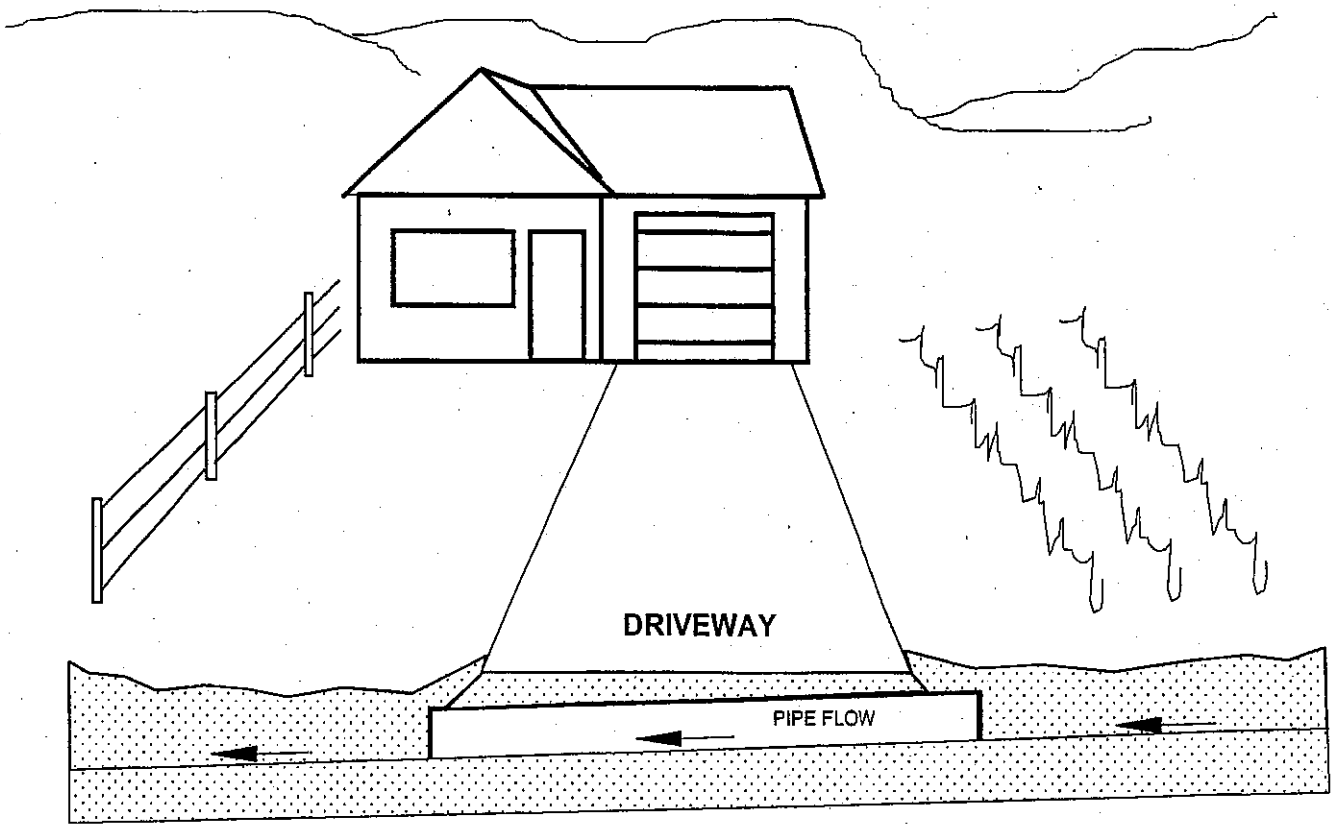

1. Pipe must be not less than 12 inches inside diameter with a minimum length of 20 ft. and be of either reinforced concrete, corrugated metal or high density smooth interior corrugated polyethylene pipe (no substitutes).

2. Pipe shall be placed so that inside flow line of pipe is at bottom of ditch and sloped true to ditch grade, maintaining free and unobstructed flow.

3. Highway shoulder must not be altered.

4. Any rise in driveway shall occur on the backslope of ditch line so that drainage from driveway will flow into the ditch and not into the highway.

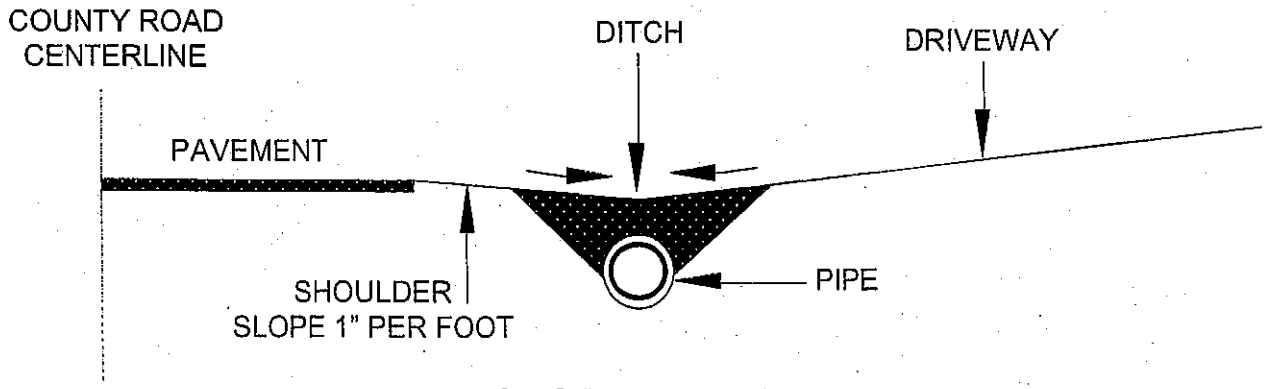

CROSS SECTION

TYPICAL RESIDENTIAL DRIVEWAY

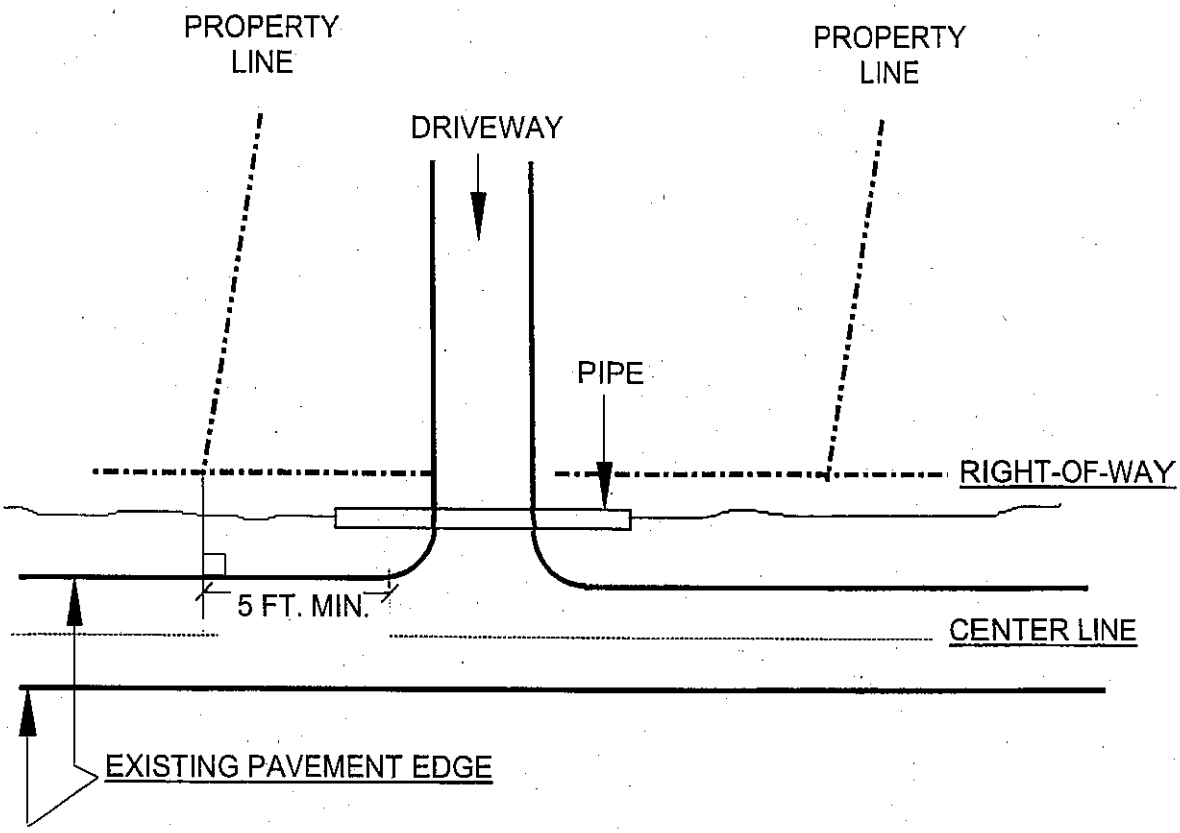

NOTE:

1. Residential driveway entrance maximum of 20' wide.
2. Minimum of 5 feet between property line and starting radius of driveway.
3. A sketch of the proposed driveway shall be submitted with each permit application.
4. See Standard Driveway Ditch Crossing Diagram attached.

POST SAVER

Mailbox Swing-Arm Bracket with hardware

PAT. #6,047,933

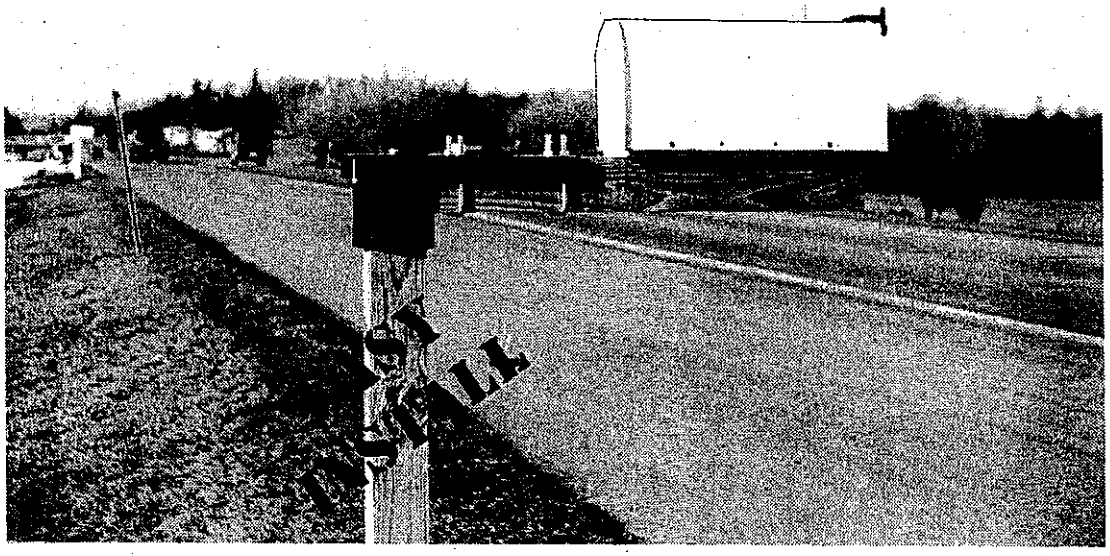

WHEN THE MAILBOX IS PUSHED BY SNOW OR SNOWPLOW THE POSTSAVER SIMPLY LETS THE MAILBOX SWING AWAY.

Why keep replacing mailbox posts when you can save them from winter to winter? Do yourself a favor . . .

Get the POST SAVER.

Bracket fabricated of formed & welded steel, pivots on 4x4 with friction pad.

$18.00 ea. + $5.00 S&H
6 or more units free shipping

B & E MFG.
3998 Rt. 14A
Penn Yan, N.Y. 14527
(315) 536-9513

POST SAVER

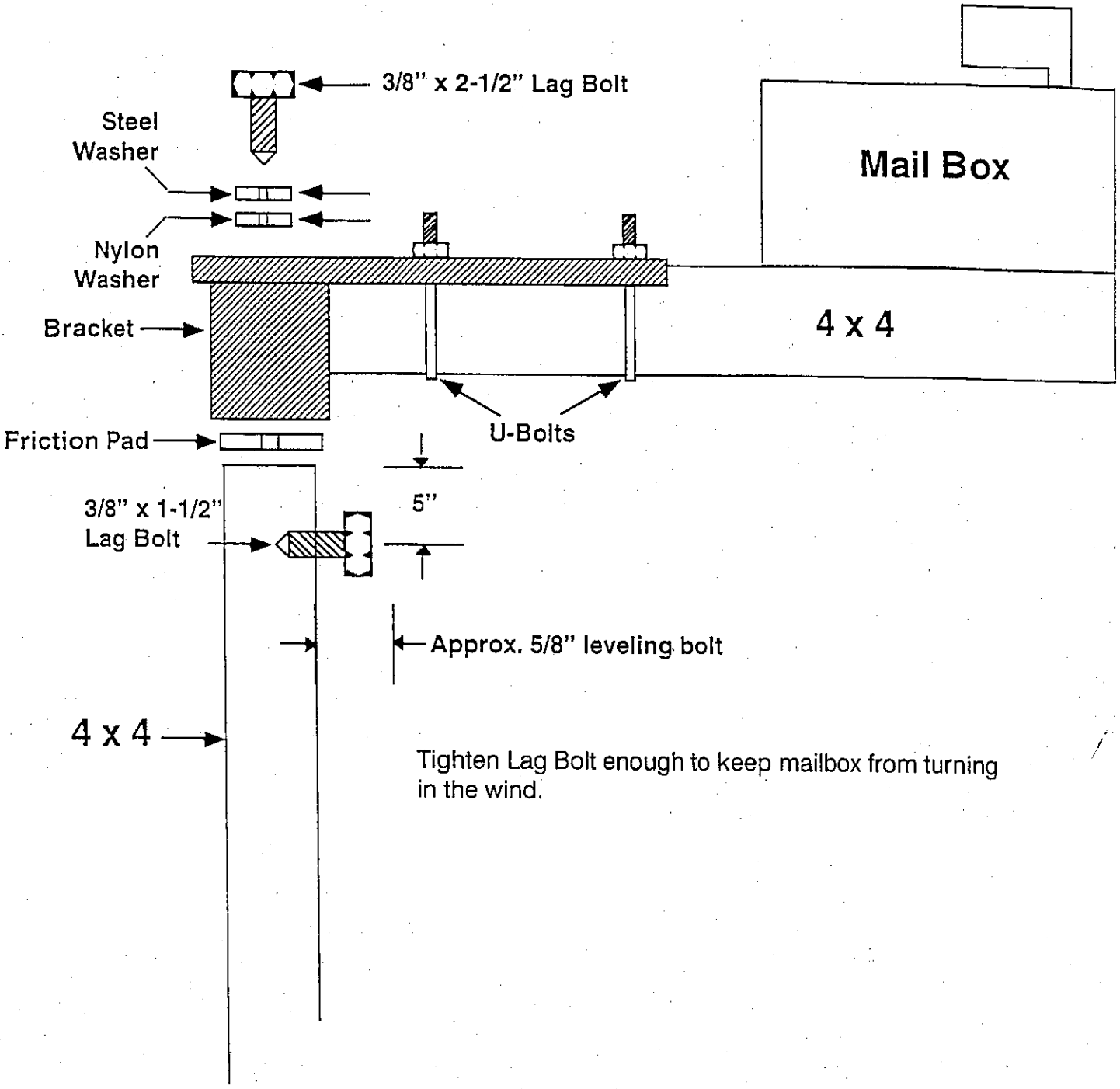

Tighten Lag Bolt enough to keep mailbox from turning in the wind.

POST SAVER

B & E Mfg.
3998 Rt. 14A • Penn Yan, NY 14527
Ph: 315/536-9513 Fax: 315/531-8834

SOLID/LIQUID FUEL BURNING DEVICE CERTIFICATION

To Whom It May Concern:

The (woodstove(s)) (fireplace(s)) (circle one) and associated chimney, located at

_____and built by_____

and installed on_____conform(s) to all building codes and manufacturer's installation requirements as set forth in the Residential Code of New York State and the National Fire Protection Agency as per Chapter 211.

_____
Signature of Installation Contractor

STATE OF NEW YORK
COUNTY OF SARATOGA
Sworn to this_____day of
_____, 2019.

_____
Notary Public

Revised 4/22/08

Affidavit of Exemption to Show Specific Proof of Workers' Compensation Insurance Coverage for a 1, 2, 3 or 4 Family, Owner-occupied Residence

This form cannot be used to waive the workers' compensation rights or obligations of any party.

Under penalty of perjury, I certify that I am the owner of the 1, 2, 3 or 4 family, **owner-occupied** residence (including condominiums) listed on the building permit that I am applying for, and I am not required to show specific proof of workers' compensation insurance coverage for such residence because (please check the appropriate box):

☐ I am performing all the work for which the building permit was issued.

☐ I am not hiring, paying or compensating in any way, the individual(s) that is(are) performing all the work for which the building permit was issued or helping me perform such work.

☐ I have a homeowner's insurance policy that is currently in effect and covers the property listed on the attached building permit AND am hiring or paying individuals a total of less than 40 hours per week (aggregate hours for all paid individuals on the jobsite) for which the building permit was issued.

I also agree to either:

- acquire appropriate workers' compensation coverage and provide appropriate proof of that coverage on forms approved by the Chair of the NYS Workers' Compensation Board to the government entity issuing the building permit if I need to hire or pay individuals a total of 40 hours or more per week (aggregate hours for all paid individuals on the jobsite) for work indicated on the building permit, or if appropriate, file a WC/DB-100 exemption form; OR
- have the general contractor, performing the work on the 1, 2, 3 or 4 family, **owner-occupied** residence (including condominiums) listed on the building permit that I am applying for, provide appropriate proof of workers' compensation coverage or proof of exemption from that coverage on forms approved by the Chair of the NYS Workers' Compensation Board to the government entity issuing the building permit if the project takes a total of 40 hours or more per week (aggregate hours for all paid individuals on the jobsite) for work indicated on the building permit.

_____
(Signature of Homeowner)

_____
(Date Signed)

_____
(Homeowner's Name Printed)

Home Telephone Number _____

Property Address that requires the building permit:

_____
_____
_____
_____

Sworn to before me this _____ day of
_____, _____.

_____
(County Clerk or Notary Public)

Once notarized, this Form BP-1 serves as an exemption for both workers' compensation and disability benefits insurance coverage.

LAWS OF NEW YORK, 1998
CHAPTER 439

The **general municipal law is amended by adding a new section 125** to read as follows:

125. ISSUANCE OF BUILDING PERMITS. NO CITY, TOWN OR VILLAGE SHALL ISSUE A BUILDING PERMIT WITHOUT OBTAINING FROM THE PERMIT APPLICANT EITHER:

1. PROOF DULY SUBSCRIBED THAT WORKERS' COMPENSATION INSURANCE AND DISABILITY BENEFITS COVERAGE ISSUED BY AN INSURANCE CARRIER IN A FORM SATISFACTORY TO THE CHAIR OF THE WORKERS' COMPENSATION BOARD AS PROVIDED FOR IN SECTION FIFTY-SEVEN OF THE WORKERS' COMPENSATION LAW IS EFFECTIVE; OR

2. AN AFFIDAVIT THAT SUCH PERMIT APPLICANT HAS NOT ENGAGED AN EMPLOYER OR ANY EMPLOYEES AS THOSE TERMS ARE DEFINED IN SECTION TWO OF THE WORKERS' COMPENSATION LAW TO PERFORM WORK RELATING TO SUCH BUILDING PERMIT.

Implementing Section 125 of the General Municipal Law

1. General Contractors – Business Owners and Certain Homeowners

For **businesses and certain homeowners listed as the general contractors on building permits,** proof that they are in compliance with Section 57 of the Workers' Compensation Law (WCL) is **ONE** of the following forms that indicate that they are:

- insured (C-105.2 or U-26.3),
- a Board-approved self-insured employer (SI-12), or
- are exempt (WC/DB-100),

under the mandatory coverage provisions of the WCL. Any residence that is not a **1, 2, 3 or 4 Family, <u>Owner-occupied</u> Residence** is considered a business (income or potential income property) and must prove compliance by filing one of the above forms.

2. Owner-occupied Residences

For homeowners of a **1, 2, 3 or 4 Family, <u>Owner-occupied</u> Residence,** proof of their exemption from the mandatory coverage provisions of the Workers' Compensation Law when applying for a building permit is to file Form BP-1.

- Form BP-1 shall be filed if the homeowner of a **1, 2, 3 or 4 Family, <u>Owner-occupied</u> Residence** is listed as the general contractor on the building permit, and the homeowner:
  - ◊ is performing all the work for which the building permit was issued him/herself,
  - ◊ is not hiring, paying or compensating in any way, the individual(s) that is(are) performing all the work for which the building permit was issued or helping the homeowner perform such work, or
  - ◊ has a homeowner's insurance policy that is currently in effect and covers the property for which the building permit was issued AND the homeowner is hiring or paying individuals a total of less than 40 hours per week (aggregate hours for all paid individuals on the jobsite) for the work for which the building permit was issued.
- If the homeowner of a **1, 2, 3 or 4 Family, <u>Owner-occupied</u> Residence** is hiring or paying individuals a total of **40 hours or MORE** in any week (aggregate hours for all paid individuals on the jobsite) for the work for which the building permit was issued, then the homeowner may not file the "Affidavit of Exemption" Form BP-1, but shall either:
  - ◊ acquire appropriate workers' compensation coverage and provide appropriate proof of that coverage on forms approved by the Chair of the NYS Workers' Compensation Board to the government entity issuing the building permit (Form C-105.2 or Form U-26.3), OR
  - ◊ have the general contractor, performing the work on the 1, 2, 3 or 4 family, **owner-occupied** residence (including condominiums) listed on the building permit, provide appropriate proof of workers' compensation coverage, or proof of exemption from that coverage on forms approved by the Chair of the NYS Workers' Compensation Board to the government entity issuing the building permit.

NEW YORK STATE
Workers' Compensation Board **Forms**

Workers' Compensation Forms

Applicant Instructions for Form CE-200 – Effective December 1, 2008

Form CE-200 reflects a totally new process for granting exemptions from workers' compensation and disability benefits insurance coverage requirements. Effective December 1, 2008, **exemptions** will no longer be valid for multiple permits, licenses or contracts for which the applicant applied. Further, exemptions no longer have to be notarized; nor do they have to be stamped by the NYS Workers' Compensation Board. (Please note that **government agencies may continue to use insurance and Self-Insurance certificates** for multiple permits, licenses or contracts issued to a specific legal entity during the coverage period listed on insurance/self-insurance related certificates).

Starting December 1, 2008, ONLY applicants eligible for **exemptions** must file a **new CE-200** for **each** and **every** new or renewed permit, license or contract issued by a government agency. Each CE-200 will specifically list the issuing government agency and the specific type of permit, license or contract requested by the applicant. Applicants for building permits will also need to supply additional information including identifying the specific job location and the estimated cost of the project.

Please ensure that the legal entity name on Form CE-200 exactly matches the legal entity name that is applying for the permit, license or contract. Please also ensure that the applicant signs and dates Form CE-200.

Each CE-200 will have a certificate number printed on it. Form CE-200s may be verified on the Board's web site at www.wcb.state.ny.us.

The applicant attests under penalty of perjury that the information contained in the CE-200 is accurate – the Board does not initially verify this information. However, Board staff may investigate applicants filing Form CE-200.

Government agencies have the authority to verify that the business is eligible for the workers' compensation and/or disability benefits exemption reason described on the CE-200 and notify the Board's investigative staff if there are discrepancies. For example, if you are applying for a license for a 150 seat restaurant and indicate on the CE-200 exemption form that you are a sole proprietor with no employees, this may indicate a problem.

To make this process as easy and as efficient as possible for business owners, the vast majority of these forms will be processed electronically on-line. Applicants having access to the internet will be able to fill out the CE-200 on the internet and **immediately** upon completion, **be able to print out a hard copy of the CE-200** that they will then submit to the government agency issuing the permit, license or contract. Computers with internet access will also be available for CE-200 electronic application processing at Customer Service Centers located in Workers' Compensation Board District Offices.

Filling out the electronic Form CE-200 on the internet is very similar to filling out a hotel reservation request on the internet for frequent travelers. The applicant will create a pin and password so that they can easily access their information. Once an applicant enters his/her basic information on the Board's web site, it can be retrieved by that applicant in the future by using that pin number and password when the applicant is applying for another permit, license or contract.

Applicants without access to a computer may obtain a paper application for the CE-200 by writing or visiting the Customer Service Center at any District Office of the Workers' Compensation Board. Applicants using the manual process may wait up to four weeks before receiving a CE-200. Once the applicant receives the CE-200, the applicant can then submit that CE-200 to the government agency from which he/she is getting the permit, license or contract. This delay results from Workers' Compensation Board staff having to manually enter information from the applicant's paper application into the web based application.

Employees of the Workers' Compensation Board cannot assist applicants in answering questions about this form. Please contact an attorney if you have any questions regarding Form CE-200.

However, if you have questions regarding workers' compensation coverage requirements, please call the Bureau of Compliance at (866) 546-9322.

INDIVIDUAL WATER SUPPLY WELL CHECKLIST FOR CODE ENFORCEMENT OFFICIALS

This checklist is produced by the New York State Department of Health (NYSDOH) if Code Enforcement Officials wish to use it when inspecting an individual water supply and issuing a building permit or a certificate of occupancy. This checklist is for code enforcement use and does not need to be submitted to any agency. The regulation governing water well standards for individual water supply is 10 NYCRR Appendix 5-B. A complete version of Appendix 5-B can be found at **http://www.health.state.ny.us/nysdoh/water/part5/appendix5b.htm.** NYSDOH Fact Sheet 6 – "Guidance for Code Enforcement Officials", should also be reviewed when using this checklist.

Name of property owner:	
Address:	
Phone:	**Fax:**
Date of inspection :	
Local or Town Permit Number:	

MANDATORY FOR COMPLIANCE WITH THE RESIDENTIAL BUILDING CODE

☐ **Department of Environmental Conservation (DEC) Registered Well Driller:**
The well driller must be registered with the DEC. A current registration sticker, like that shown here, is to be located on the left front fender of the drill rig. The style and/or color of this sample sticker may change on a yearly basis.

☐ **Well Completion Report:**
The well completion report must be submitted to the DEC and the well owner. Details on the well completion report must include: well depth, casing length, depth and type of grout, screen type (if applicable), well yield, pump type, etc. On the reverse side is an example of a well completion report and where each item can be found.

☐ **Well Location and Separation Distances:** The separation distances from the water well to potential contaminant sources shall be adhered to. The table below is a list of required separation distances from wells to the most commonly encountered contaminant sources. Refer to Appendix 5-B for a full list of separation distances. In addition, the well shall not be prone to flooding or ponding of surface water.

Contaminant Source	Distance (Feet)
Wastewater treatment absorption systems located in coarse gravel or in the direct path of drainage to a well	200
Seepage pit (following septic tank)	150
Absorption field or bed	100
Septic tank, aerobic unit, watertight effluent line to distribution box	50
Stream, lake, watercourse, drainage ditch, or wetland	25

ITEMS RECOMMENDED FOR VERIFICATION

☐ **On-Site Supervisor:**

A certified on-site supervisor must be present onsite during the water well installation activities. The certified supervisor must carry documentation showing completion of the two-part licensing exam by the National Ground Water Association (or equivalent).

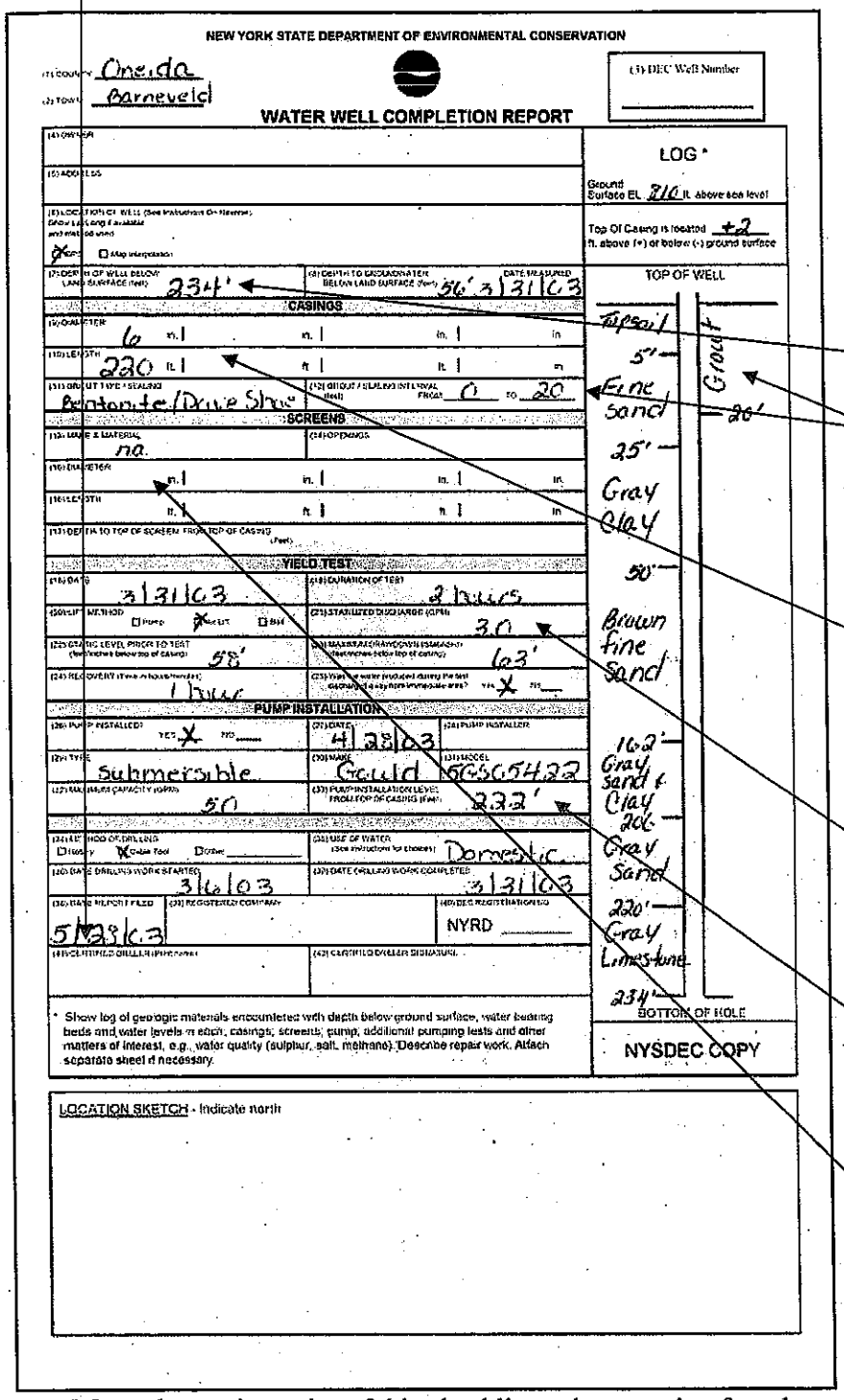

NEW YORK STATE DEPARTMENT OF ENVIRONMENTAL CONSERVATION

(1) COUNTY Oneida
(2) TOWN Barneveld

WATER WELL COMPLETION REPORT

(3) DEC Well Number

(4) OWNER
(5) ADDRESS
(6) LOCATION OF WELL (See instructions on reverse)
(7) DEPTH OF WELL BELOW LAND SURFACE (feet) 234'
(8) DEPTH TO GROUNDWATER BELOW LAND SURFACE (feet) 56' DATE MEASURED 3/31/03

CASINGS
(9) DIAMETER 6 in.
(10) LENGTH 220 ft.
(11) GROUT TYPE / SEALING Bentonite/Drive Shoe
(12) GROUT / SEALING INTERVAL (feet) FROM 0 TO 20

SCREENS
(13) MAKE & MATERIAL na.
(14) OPENINGS
(15) DIAMETER in.
(16) LENGTH ft.
(17) DEPTH TO TOP OF SCREEN FROM TOP OF CASING (feet)

YIELD TEST
(18) DATE 3/31/03
(19) DURATION OF TEST 2 hours
(20) LIFT METHOD ☐ Pump ☒ Air Lift ☐ Bailer
(21) STABILIZED DISCHARGE (GPM) 30
(22) STATIC LEVEL PRIOR TO TEST (feet below top of casing) 58'
(23) MAXIMUM DRAWDOWN (feet below top of casing) 63'
(24) RECOVERY (time or hours/minutes) 1 hour
(25) Was all water produced during the test discharged to a sanitary non-impermeable area? YES ☒ NO ☐

PUMP INSTALLATION
(26) PUMP INSTALLED? YES ☒ NO ☐
(27) DATE 4/28/03
(28) PUMP INSTALLER
(29) TYPE Submersible
(30) MAKE Gould
(31) MODEL 6GS5S4J22
(32) RAT[illegible] CAPACITY (GPM) 50
(33) PUMP INSTALLATION LEVEL FROM TOP OF CASING (feet) 222'

(34) METHOD OF DRILLING ☐ Hollow ☒ Cable Tool ☐ Other
(35) USE OF WATER (See instructions for choices) Domestic
(36) DATE DRILLING WORK STARTED 3/6/03
(37) DATE DRILLING WORK COMPLETED 3/31/03
(38) DATE REPORT FILED 5/28/03
(39) REGISTERED COMPANY
(40) DEC REGISTRATION NO. NYRD
(41) CERTIFIED DRILLER (Print name)
(42) CERTIFIED DRILLER SIGNATURE

* Show log of geologic materials encountered with depth below ground surface, water bearing beds and water levels in each, casings, screens, pump, additional pumping tests and other matters of interest, e.g., water quality (sulphur, salt, methane). Describe repair work. Attach separate sheet if necessary.

LOG *
Ground Surface EL. 810 ft. above sea level
Top Of Casing is located +2 ft. above (+) or below (-) ground surface
TOP OF WELL
Topsoil
5'
Fine sand
25'
Gray Clay
50'
Brown fine sand
162'
Gray Sand & Clay
206'
Gray Sand
220'
Gray Limestone
234'
BOTTOM OF HOLE
Grout
20'
NYSDEC COPY

LOCATION SKETCH - Indicate north

☐ **Well Cap**
All wells shall have a properly vented, watertight, vermin proof well cap. Appendix 5-B.5 (g)

☐ **Well depth**

☐ **Grout**
Appendix 5-B.3(b) and Table 2 (if applicable)

☐ **Casing**
Appendix 5-B.3(b) and Table 2

☐ **Yield**
Appendix 5-B.4

☐ **Well Pump**
Appendix 5-B.5

☐ **Well Screen**
Appendix 5-B.3(b)(19) and Table 2 (if applicable)

More electronic copies of this checklist and supporting fact sheets can be obtained at **http://www.health.state.ny.us/nysdoh/water/main.htm** or by contacting your Local Health Department or the Bureau of Water Supply Protection, Residential Sanitation Section at **bpwsp@health.state.ny.us**

May 19, 2006

ELECTRICAL INSPECTION AGENCY

COMMONWEALTH ELECTRICAL INSPECTION SERVICE, INC.

Scott Honsinger
(518) 225-2538 Cell

Damon Dzembo (Residential Only)
(518) 858-4253 Cell

Ronald Mumblo (Residential Only)
(518) 791-1348 Cell
(518) 798-0905 Office

THE INSPECTOR, LLC

David Irwin
(518) 797-3520 Direct Line
(518) 788-6235 Cell

Ken Vanderhoef
(518) 674-2097 Direct Line
(518) 339-4798 Cell

William McPartlon
(518) 481-5300 Office
(518) 229-7733 Cell

MIDDLE DEPARTMENT, INC.

Joseph Holmes
(518) 860-5705 Cell
(518) 854-9290 Office

Martin Sawyer
(518) 703-1244 Cell
(518) 273-0861 Office

Z3 CONSULTANTS INC. Main Office (845) 471-9370

Jon Ariel
(518) 584-2189 Home
(518) 527-5728 Cell

Gary E. Beck, Jr.
(845) 518-2142 Cell

James Greaves (Residential Only)
(914) 456-2221 Cell

THIS IS A LIST OF THE INSPECTION AGENCIES APPROVED BY THE TOWN BOARD TO WORK IN THE TOWN OF WILTON. THIS DOES NOT CONSTITUTE A RECOMMENDATION OF ANY SPECIFIC AGENCY.

Last Modified: 01_20_23 T. Morgan